UP-CRST02 Rev.A0.2_0_0

TABLE OF CONTENTS

SHEET NUMBER	SHEET NAME
01	Index
02	System Block Diagram
03	EXHAT-100
04	USB TO UART
05	UART TO RS-232/422/485
06	MAX10
07	EEPROM & LED
08	DC IN TO 5V
09	3V/1.8V/1.2V Voltage Regulator
10	Mechanical Component
11	History

UP-CRST02 Rev.A0.2_0_0

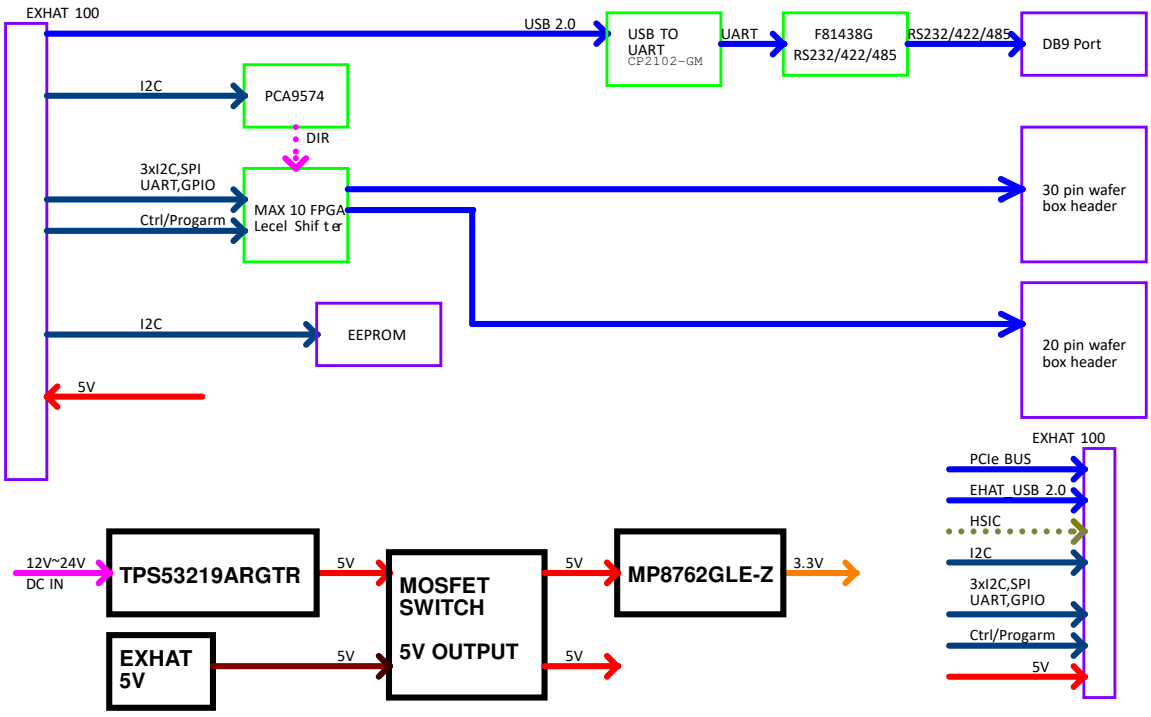

Title: System Block Diagram		
Size: Custom	Document Number: UP-CRST02	Rev: A0.2_0_0
Date: Monday, October 30, 2017		Sheet: 2 of 11

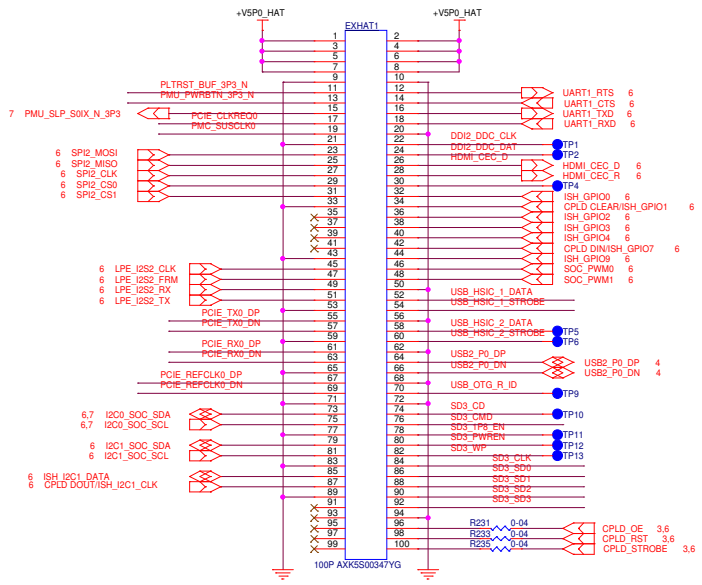

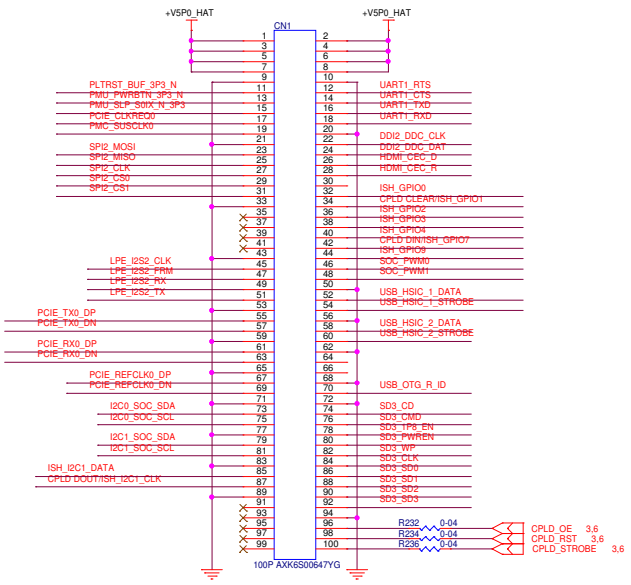

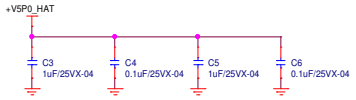

AAEON an ASUS assoc. co.	Title: EXHAT-100		
	Size: B	Document Number: UP-CRST02	Rev: A0.2_0_0
	Date: Monday, October 30, 2017		Sheet: 3 of 11

USB TO UART

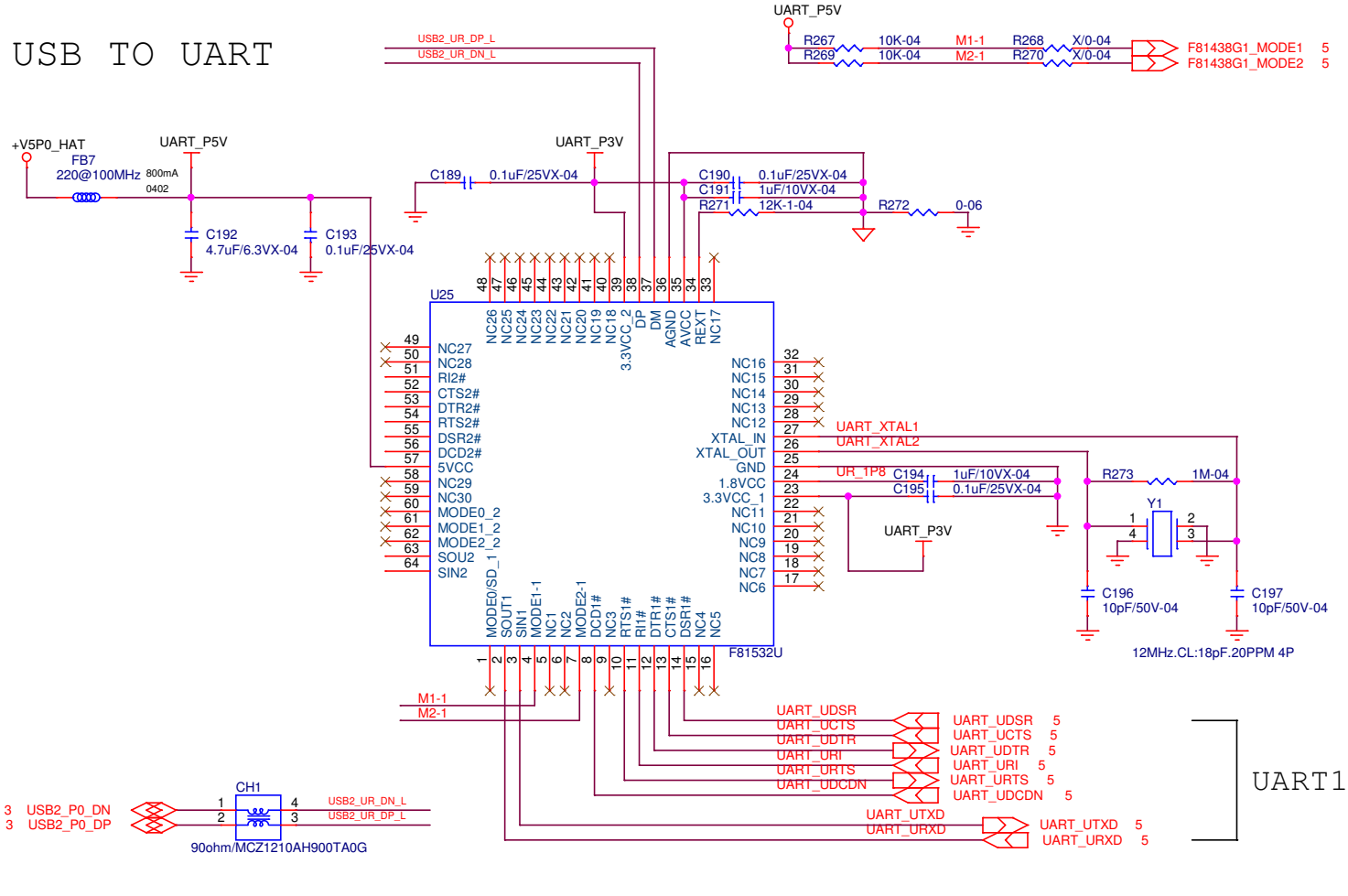

AAEON an ASUS assoc. co.	Title: USB TO UART		
	Size: A	Document Number: UP-CRST02	Rev: A0.2_0_0
	Date: Monday, October 30, 2017	Sheet: 4 of 11	

Serlal Port Mode Selection

SD	Mode_1	Mode_2	Mode
0	0	0	RS-422
0	0	1	RS-232 Default
0	1	1	RS-485
1	X	X	Shutdown Mode

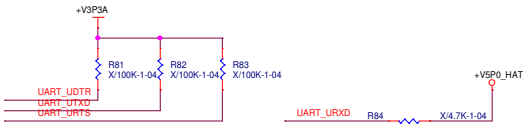

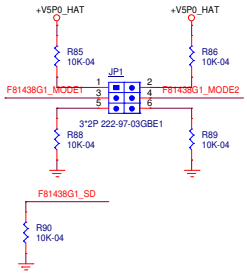

F81438G_MODE1	Selection	
1-3	1	
3-5	0	Default

F81438G_MODE2	Selection	
2-4	1	Default
4-6	0	

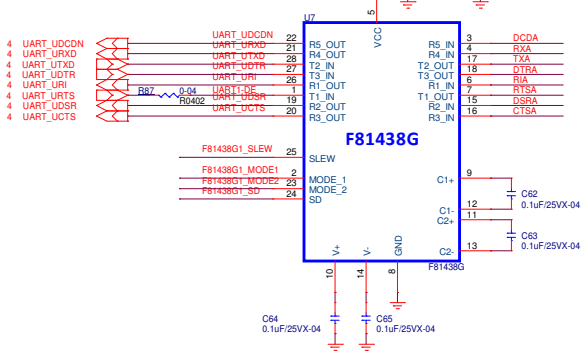

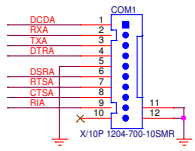

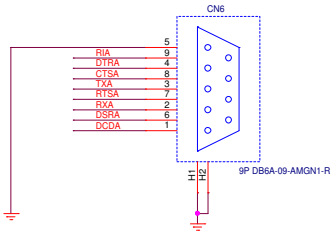

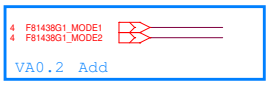

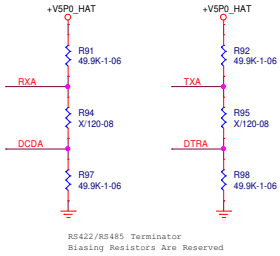

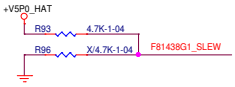

Maximum Slew rate control		
SLEW	RS-232	RS-485/RS-422
0	1Mbps	10Mbps
1	250Kbps	250Kbps Default

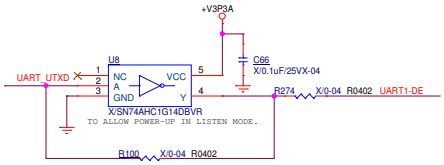

AAEON an ASUS assoc. co.

Title		
UART TO RS-232/422/485-1		
Size B	Document Number UP-CRST02	Rev: A0.2_0_0
Date: Monday, October 30, 2017		Sheet: 5 of 11

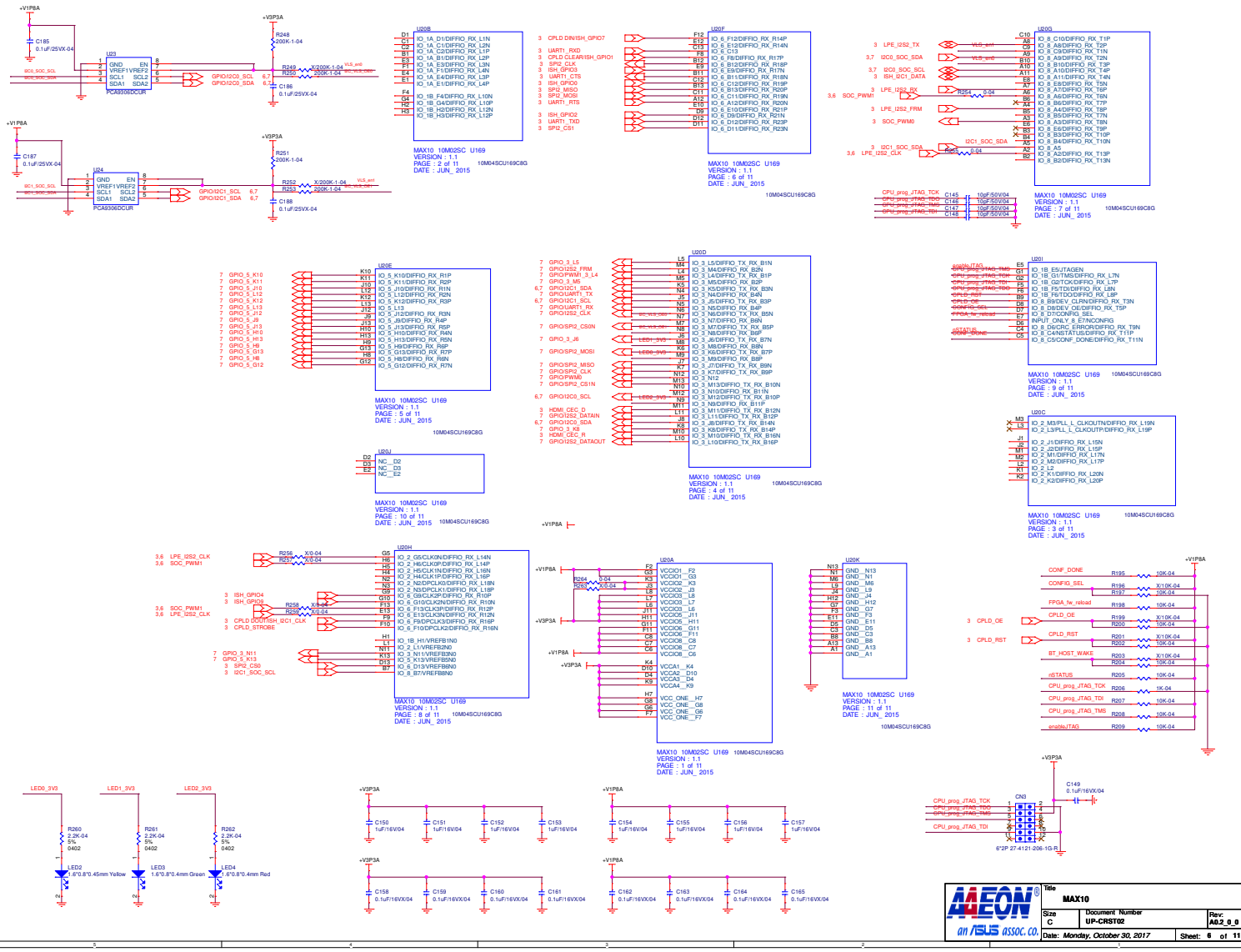

Title	MAX10
Size	C
Document Number	UP-CRST02
Rev:	A0.2_0_0
Date:	Monday, October 30, 2017
Sheet:	6 of 11

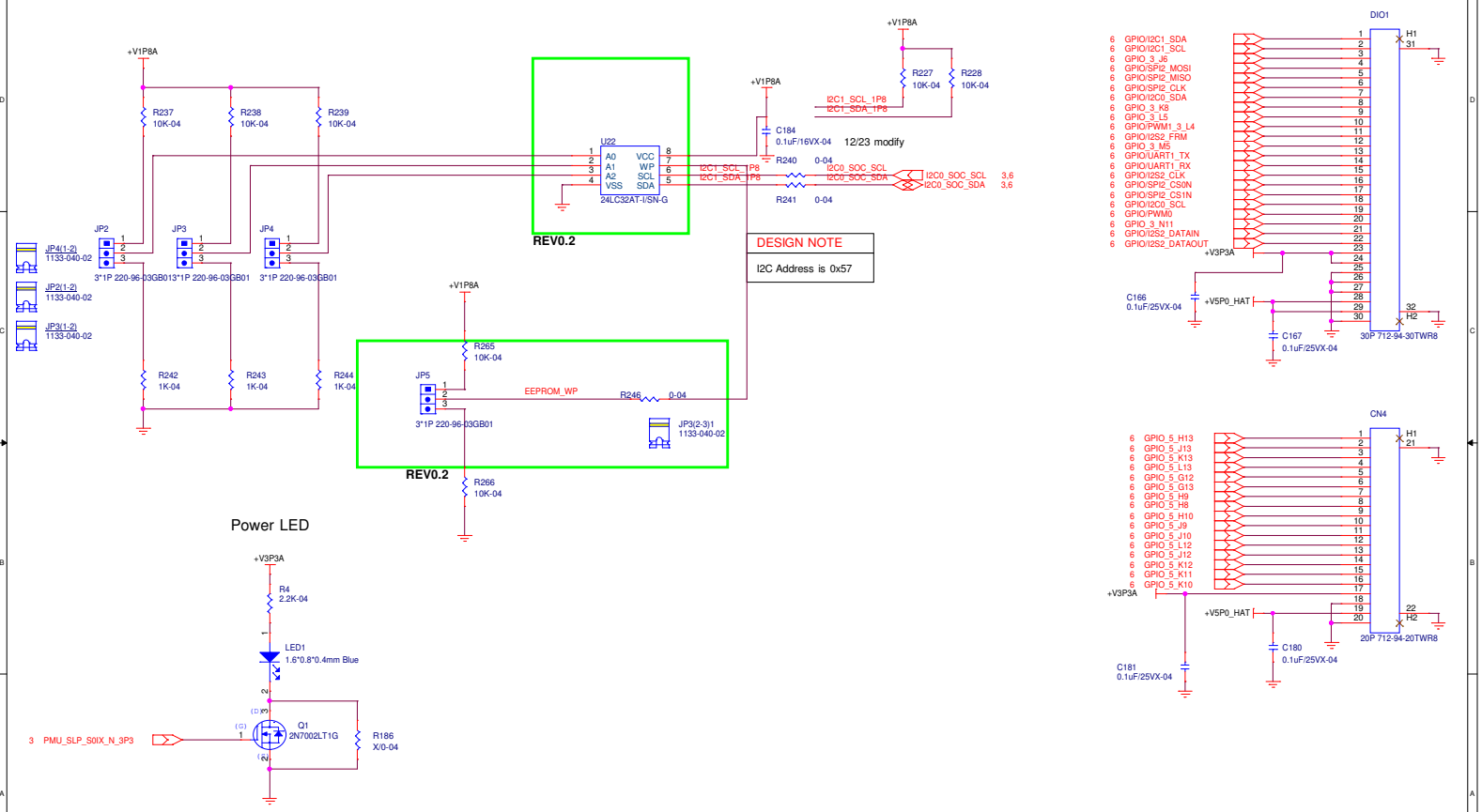

AAEON an ASUS assoc. co.	Title: EEPROM & LED	
Size: B	Document Number: UP-CRST02	Rev: A0.1_0_0
Date: Monday, October 30, 2017		Sheet: 7 of 11

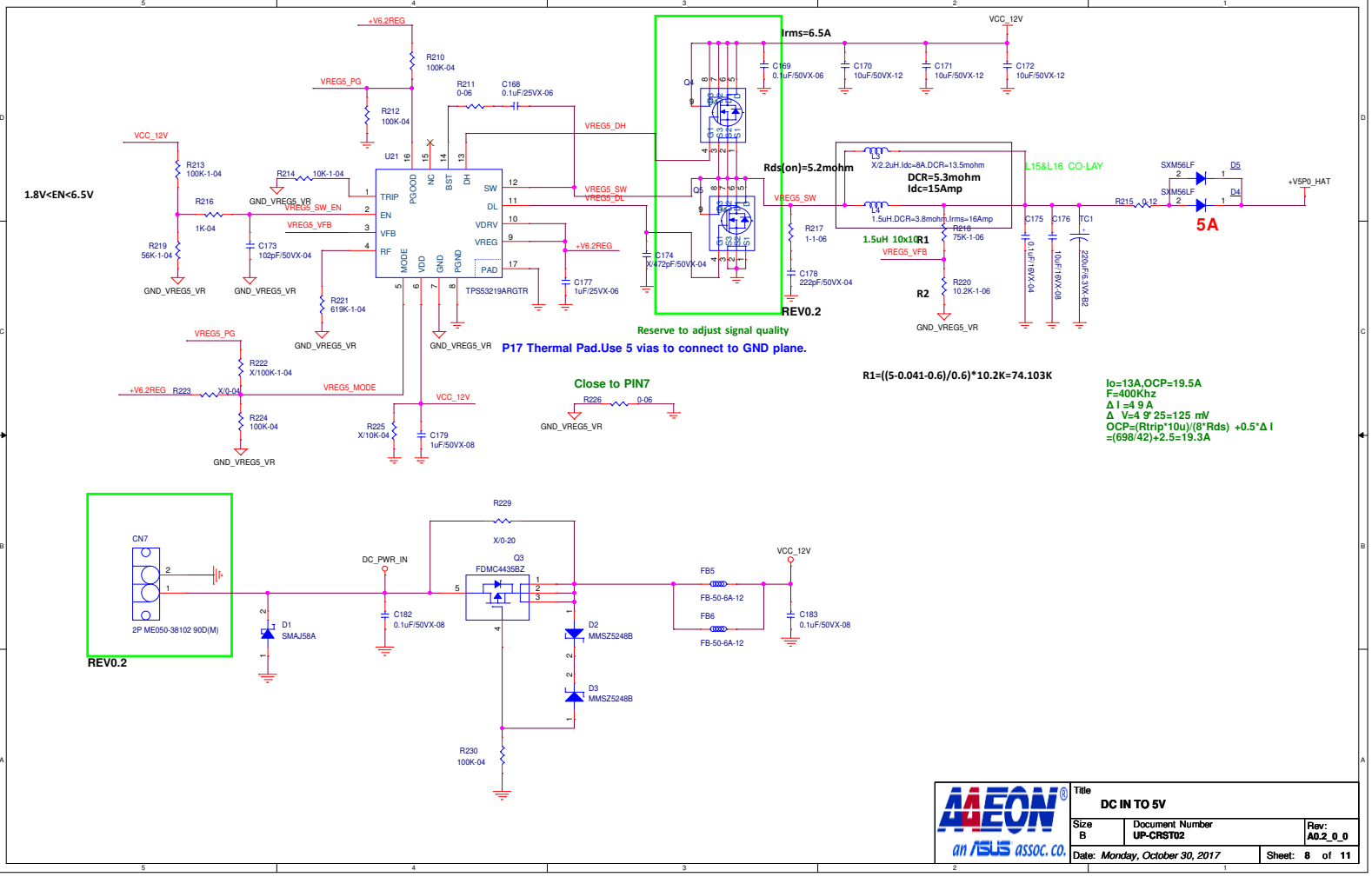

AAEON an ASUS assoc. co.	Title: DC IN TO 5V	
Size: B	Document Number: UP-CRST02	Rev: A0.2_0_0
Date: Monday, October 30, 2017	Sheet: 8 of 11	

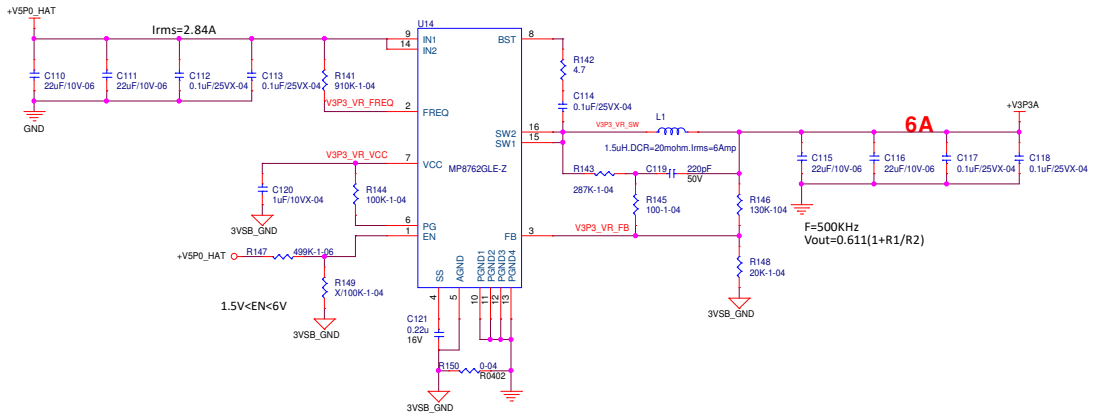

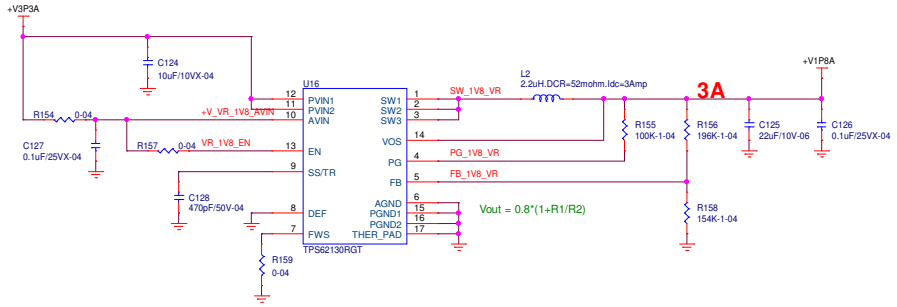

AAEON an ASUS assoc. co.	Title: 3V/1.8V/1.2V Voltage Regulator		
	Size: B	Document Number: UP-CRST02	Rev: A0.2_0_0
	Date: Monday, October 30, 2017	Sheet: 9 of 11	

SCREW HOLE

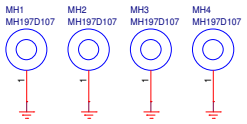

MOUNT HOLE

REAR CAM BOSS

FRONT CAM BOSS

Buttom View

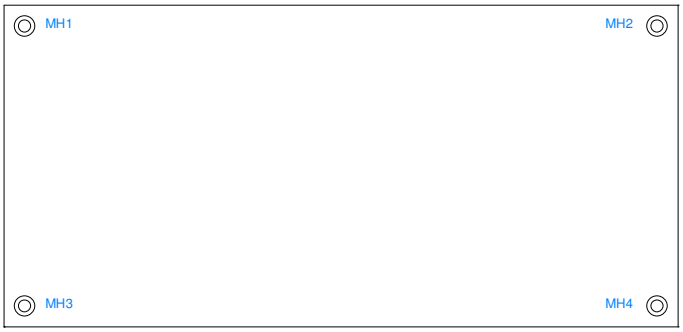

AAEON an ASUS assoc. co.	Title: Mechanical Component		
	Size: B	Document Number: UP-CRST02	Rev: A0.2_0_0
	Date: *Monday, October 30, 2017*		Sheet: 10 of 11

History

DATE	Revision	Description
20171006	A0.2_0_0	P03 add pin header for W/P P03 Change U22 Footprint P08 Change DCIN Connector

AAEON an ASUS assoc. co.	Title: History		
	Size: B	Document Number: UP-CRST02	Rev: A0.2_0_0
	Date: Monday, October 30, 2017		Sheet: 11 of 11